AXIAL FANS

BLADE DIAMETER
130 mm
5 inch

12V DC	F09-12C001-01S	Suction-Aspirante
	F09-12C001-01B	Blowing-Soffiante

Test Voltage: **13,0** VOLT DC

Static Pressure		SUCTION Aspirante				BLOWING Soffiante			
Pa	IN H2O	Airflow m³/h	Airflow cfm	Current A	Eff. %	Airflow m³/h	Airflow cfm	Current A	Eff. %
0	0	**430**	*250*	2,50					
25	0,1	**390**	*230*	2,60					
50	0,2	**360**	*210*	2,65					
75	0,3	**320**	*190*	2,70					
100	0,4	**230**	*140*	2,70					
125	0,5	**170**	*100*	2,80					
150	0,6	**130**	*70*	2,90					
175	0,7	**90**	*50*	3,00					
200	0,8	**60**	*30*	3,05					
225	0,9	**0**	*0*	3,20					

24V DC	

Test Voltage: **26,0** VOLT DC

Static Pressure		SUCTION Aspirante				BLOWING Soffiante			
Pa	IN H2O	Airflow m³/h	Airflow cfm	Current A	Eff. %	Airflow m³/h	Airflow cfm	Current A	Eff. %
0	0								
25	0,1								
50	0,2								
75	0,3								
100	0,4								
125	0,5								
150	0,6								
175	0,7								
200	0,8								
225	0,9								

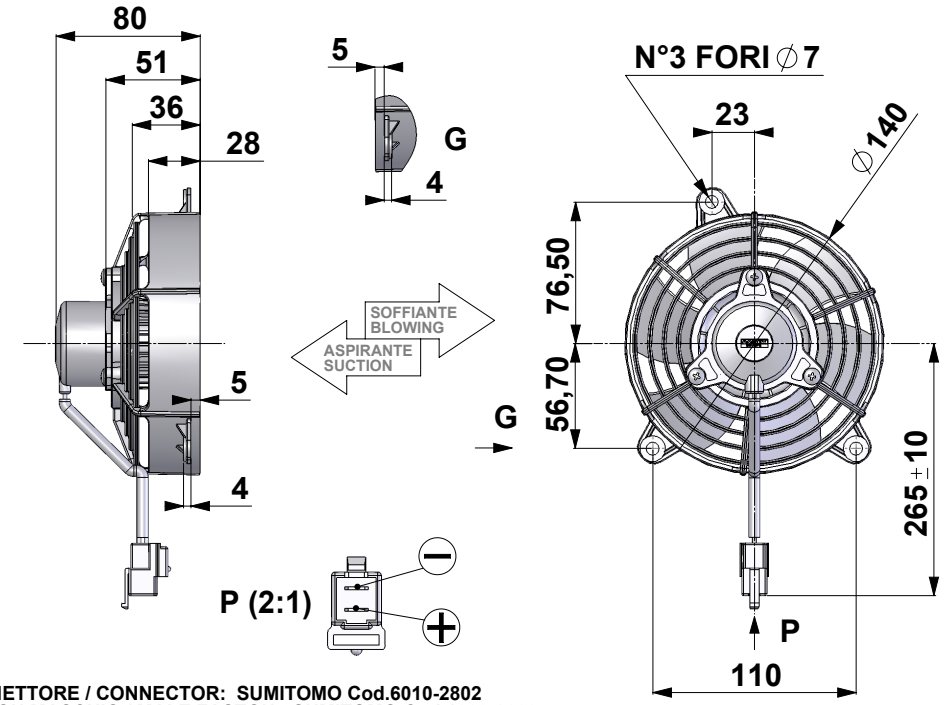

CONNETTORE / CONNECTOR: SUMITOMO Cod.6010-2802
FASTON MASCHIO / MALE FASTON: SUMITOMO Cod.1800-2093

Weight: 0,4 Kg	Noise: LOW NOISE
Pressure rate: 1Pa = 0,004 inch H2O	Static Pressure: pascal (Pa)
Dimensions rate: 25,4 mm = 1 inch	Airflow rate: 1 m³/h = 0,59 cfm